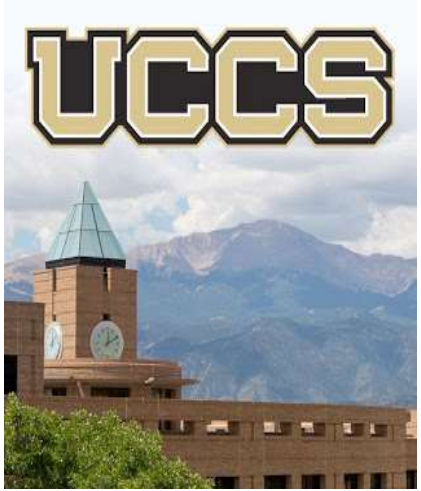

Unit 01.02.02
CS 5220:
COMPUTER COMMUNICATIONS

OSI Unified View of Protocols and Services

XIAOBO ZHOU, Ph.D.

Professor, Department of Computer Science

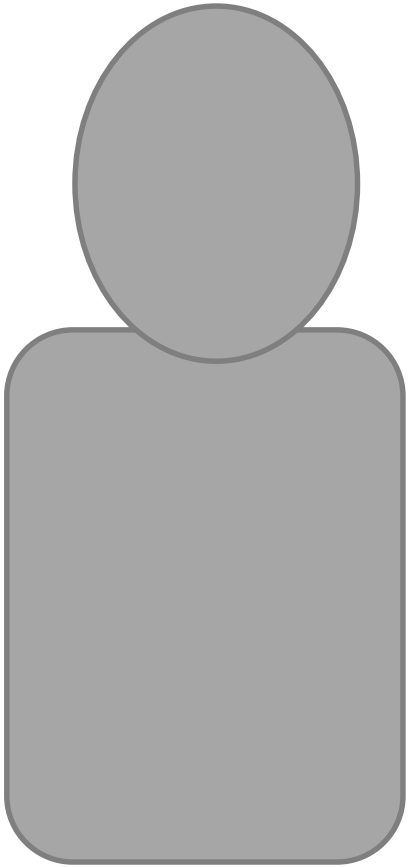

OSI Unified View: layers

- A layer is a set of related communication functions managed and grouped together
- Layer *n* in one machine interacts with layer *n* in another machine to provide a service to its upper layer *n +1*
- The entities comprising the corresponding layers on different machines are called *peer processes.*
- The processes at layer *n* are referred to as layer *n* entities.

OSI Unified View: Protocols

- The machines at the same layer use a set of precise and unambiguous rules called the *layer-n protocol*.
- Layer-*n* peer processes communicate by exchanging *Protocol Data Units* (PDUs)

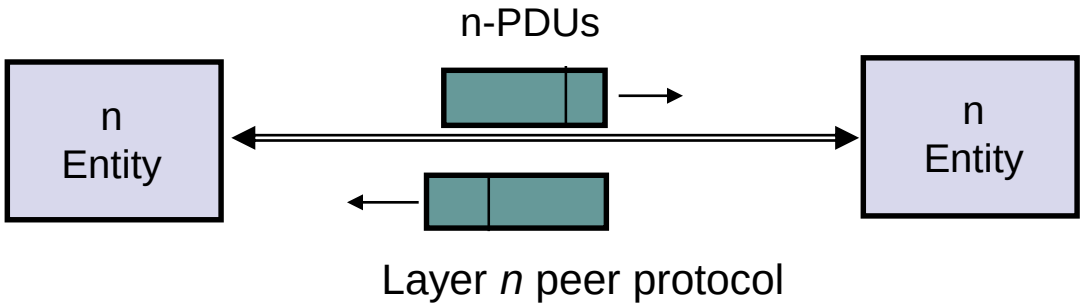

OSI Unified View: Services

- Communication between peer processes is virtual and actually indirect
- Layer *n+1* transfers information by invoking the services provided by layer *n*
- Services are available at *Service Access Points (*SAP's)
- Each layer passes data & control information to the layer below it until the physical layer is reached and transfer occurs
- The data passed to the layer below is called a *Service Data Unit* (SDU); SDU's are *encapsulated* in PDU's

Layers, Services & Protocols

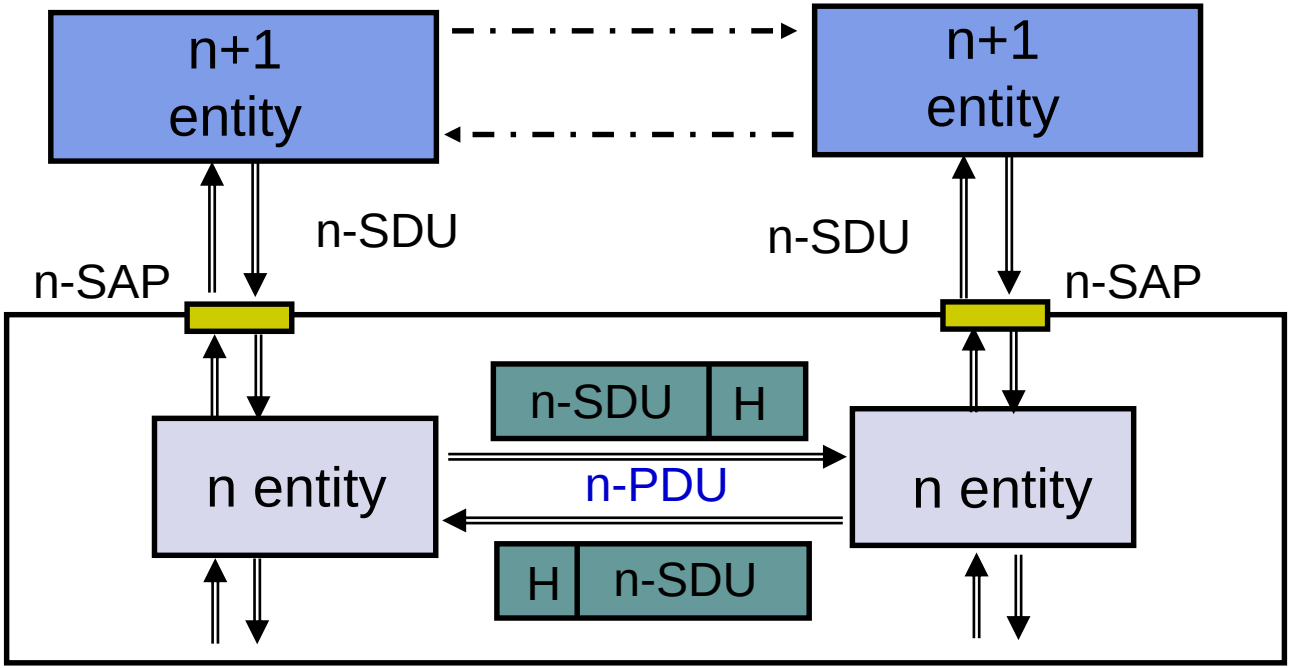

Encapsulation

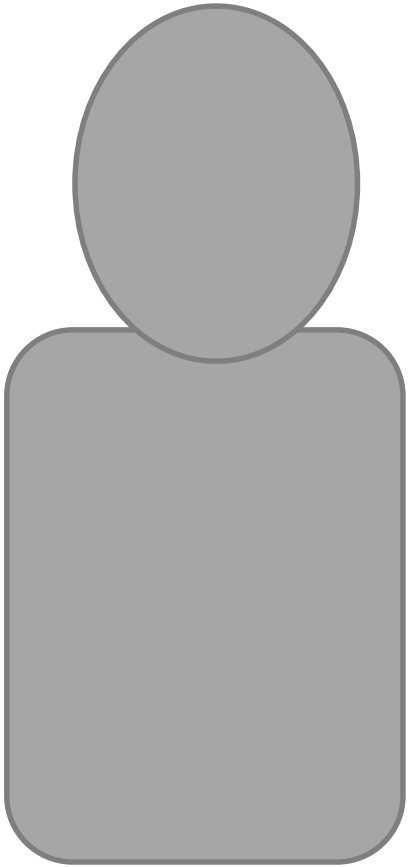

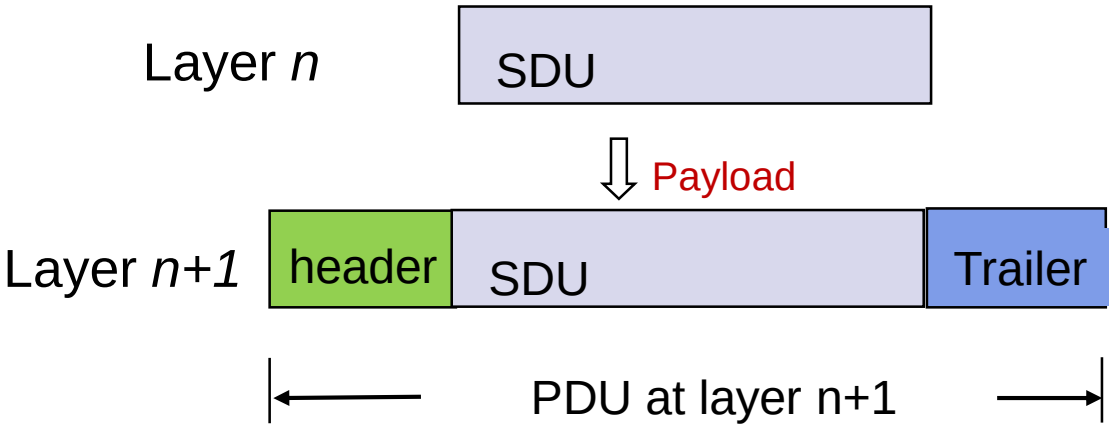

Headers & Trailers

- Each protocol uses a header that carries addresses, sequence #…

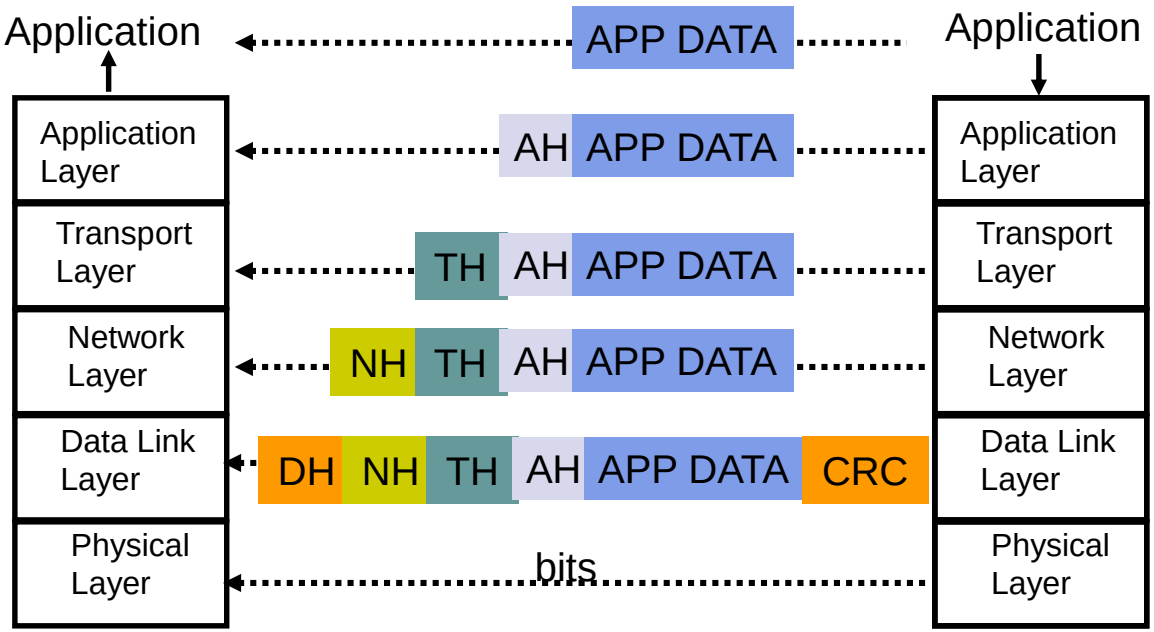

Bandwidth Utilization

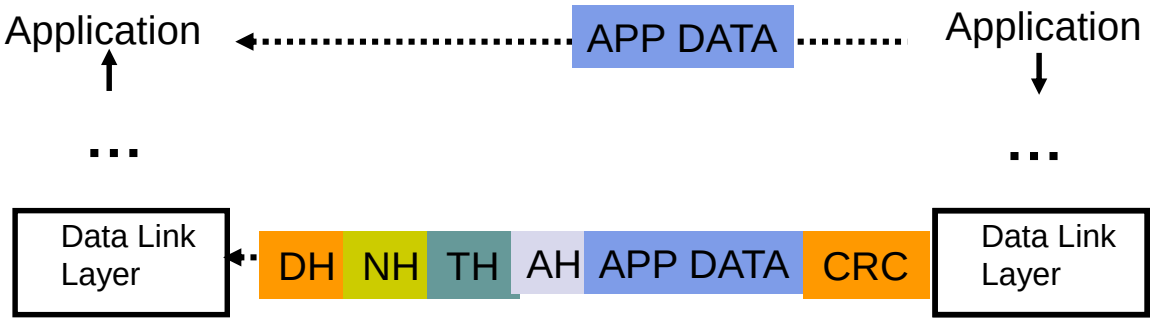

$$\text{Utilization} = \frac{\text{APP DATA}}{\text{APP DATA} + \text{HEADERS} + \text{CRC}}$$

Encapsulation in TCP/IP

TCP Header contains source & destination port numbers

IP Header contains source and destination IP addresses; transport protocol type

Ethernet Header contains source & destination MAC addresses; network protocol type

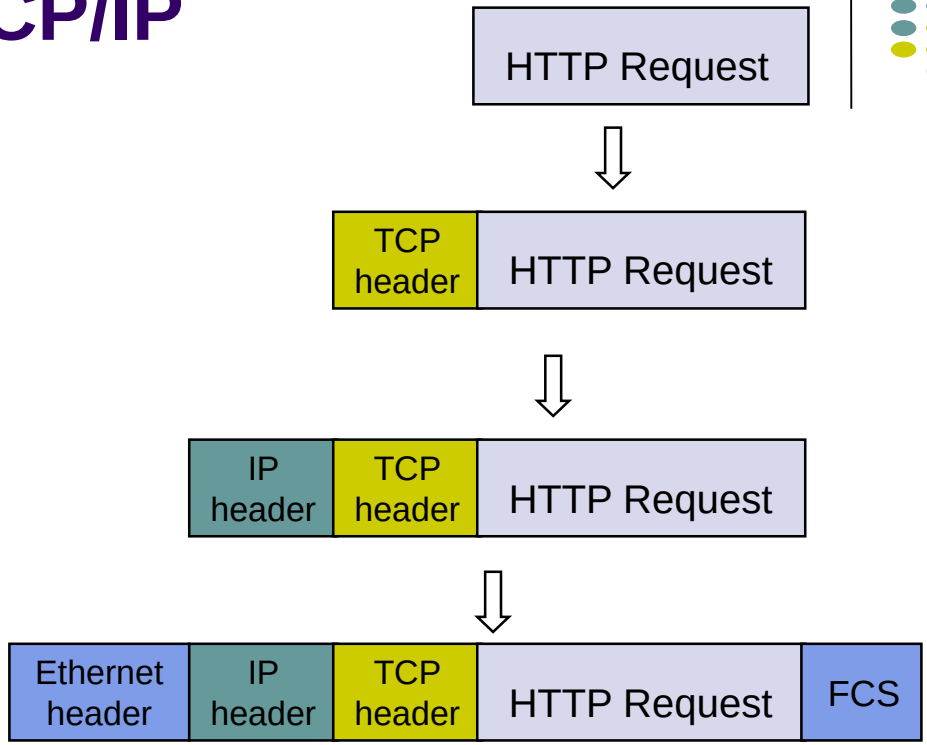

Segmentation & Reassembly

- A layer may impose a limit on the size of a data block that it can transfer
- Thus a layer-*n* SDU may be too large to be handled as a single unit by layer-(*n-1*)
- Sender side: SDU is segmented into multiple PDUs
- Receiver side: SDU is reassembled from sequence of PDUs

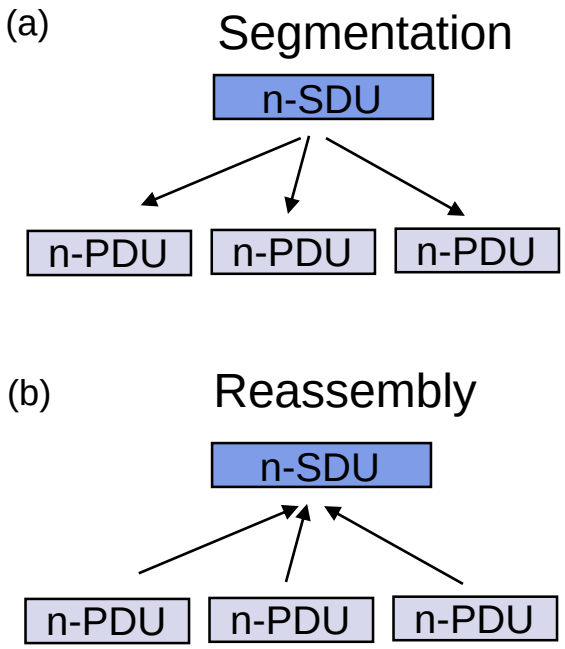

Connectionless & Connection-Oriented Services

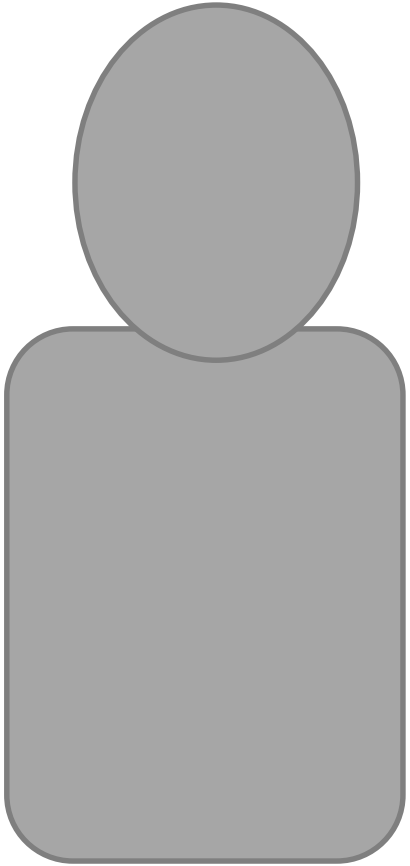

- Connection-Oriented
  - Three-phases:
    1. Connection setup between two SAPs to initialize state information
    2. SDU transfer
    3. Connection release
  - E.g. TCP, ATM
- Connectionless
  - Immediate SDU transfer
  - No connection setup
  - E.g. UDP, IP

Why Internetworking?

- To build a “network of networks” or Internet
  - operating over multiple, coexisting, different network technologies
  - providing ubiquitous connectivity through IP packet transfer

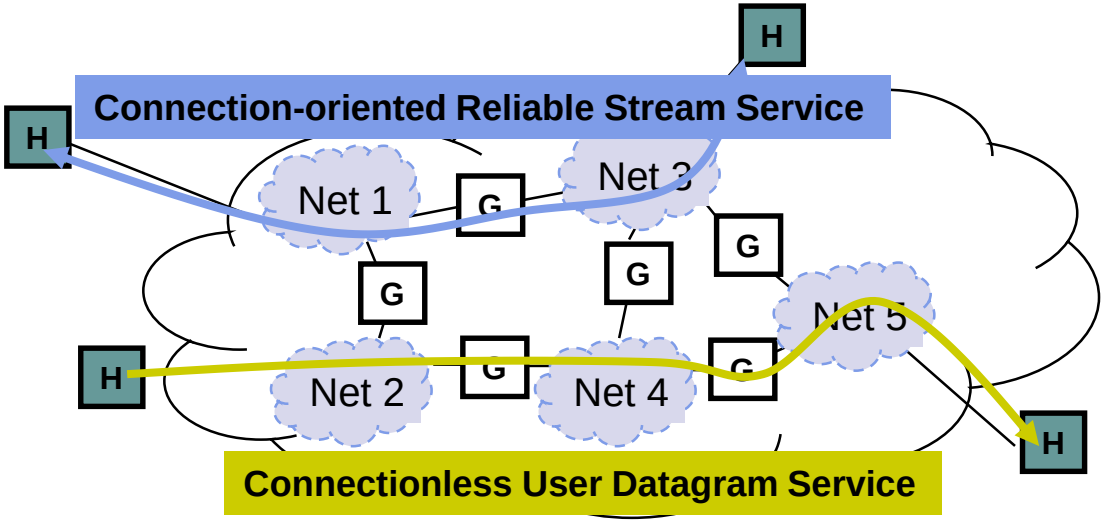

Internet Protocol (IP) Approach

- IP packets transfer information across Internet

Host A IP → router→ router…→ router→ Host B IP

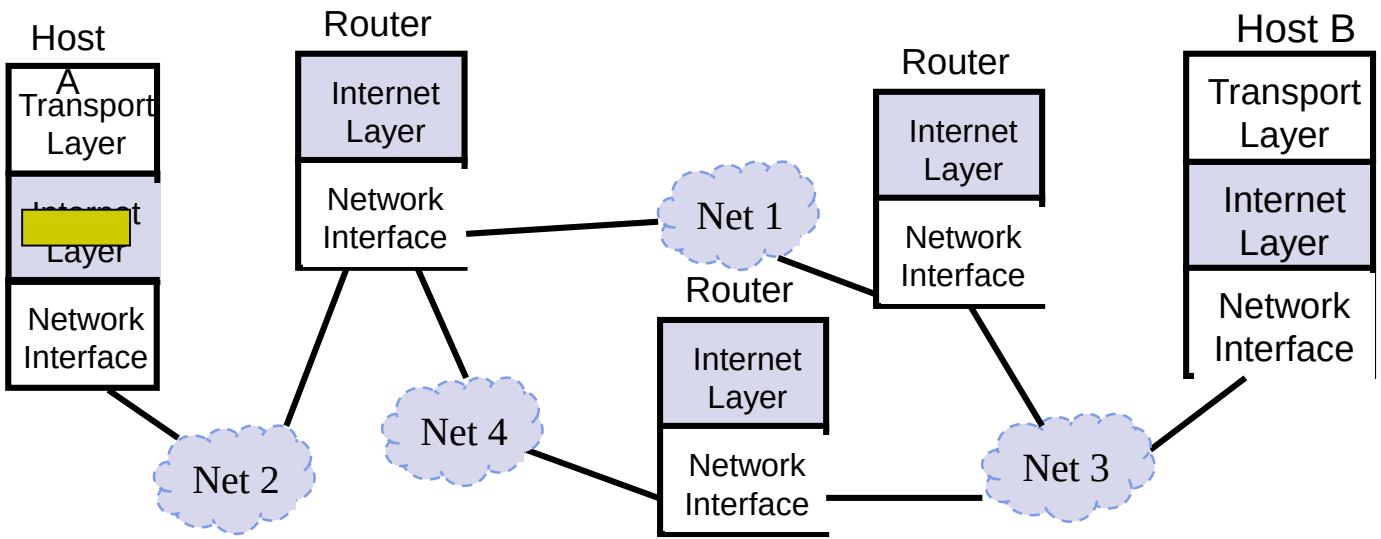

Lesson Summary

- The unified view enables a common understanding of the protocols and services found in different layers.